TE 357: Optical Communications

Lecture 5: Photo Detectors

Lecture Outline

- Introduction
  - Function
  - Performance requirements
- Physical principles of photodiodes
  - Energy Band
  - pn junction
- the principle of Operation of photo detectors
  - pn
  - PIN
  - APD
- Photo detector characteristics
  - Quantum efficiency
  - Responsivity
  - Spectral response range

Photo detectors

- At the output end of an optical transmission line
  - there must be a receiving device that interprets the information contained in the optical signal

Photo detectors

- The first element of this receiver is a photo detector

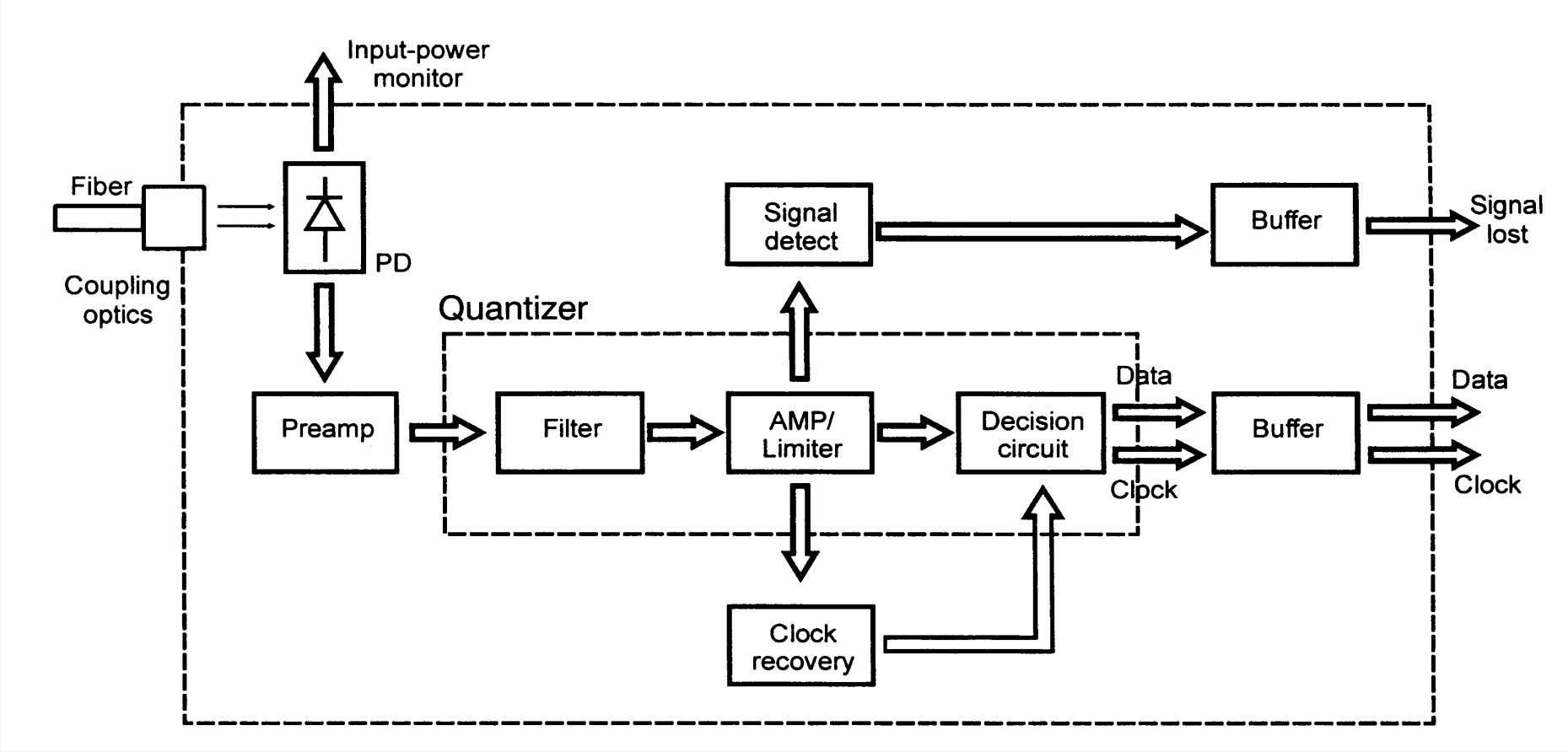

Photo Detector - Function

- Photo detector
  - converts light energy (photons) back into electrical signals
- When light strikes the detector
  - Current (photocurrent) is produced in the external circuit proportional to the intensity of the incident light

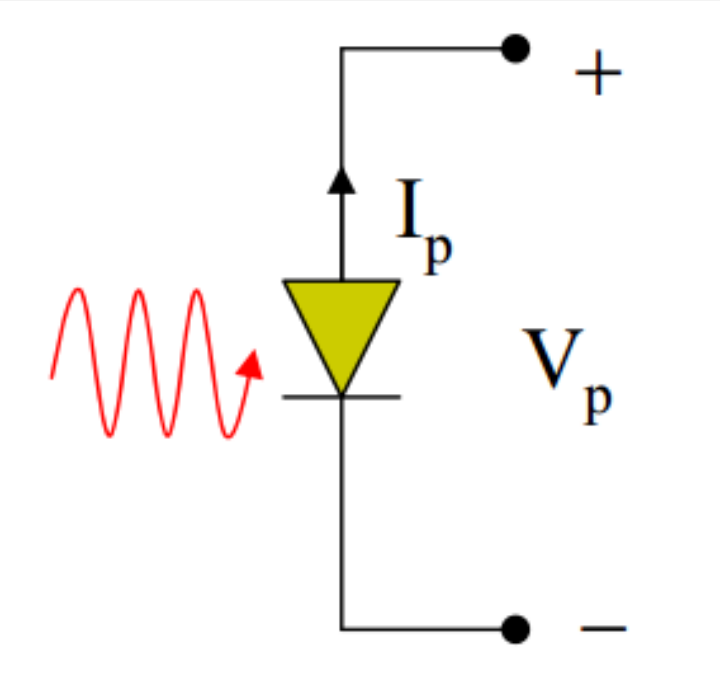

Photo Detectors

- Since
  - the optical signal is generally weakened and distorted when it emerges from the end of the fiber
    - The photo detector must meet very high-performance requirements

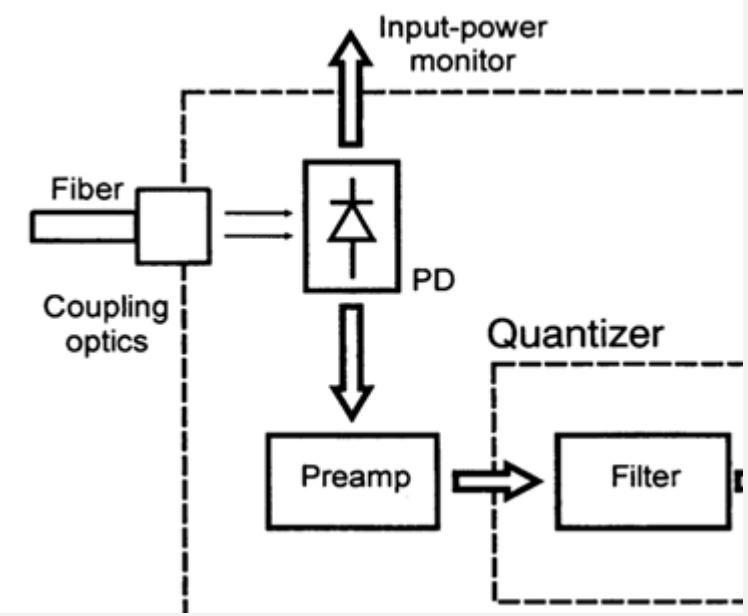

Photo Detectors

- The photo detector must meet very high-performance requirements
  1. High response or sensitivity in the emission wavelength range of the optical source being used
  2. A minimum addition of noise to the system
  3. A fast response speed or sufficient bandwidth to handle the desired data rate
  4. Be insensitive to temperature variations
  5. Be compatible with the physical dimensions of the fiber

Physical Principles of Photodiodes

- The photo detector
  - senses the optical power that falls on it and converts the variation of this optical power into correspondingly varying electric current

- The concepts of
  - energy band and pn junction
    - can be used to explain how Light (photon) is converted into an electrical signal

question

- What is current?

Energy band

- Electrons at the valence band are bonded and cannot move
  - Hence no current flows through the material
- When a photon with energy
  - greater or equal to the band gap energy of the semiconductor material is incident/strike the material
    - The photon is absorbed and its energy acquired by an electron
      - the electron is excited at the conduction band and is now able to move

Energy band

- Electron-hole photo generation in a semiconductor

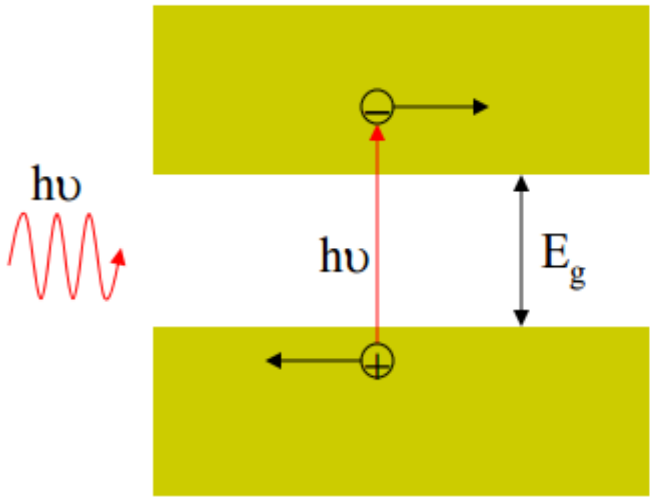

- absorbed photons *generate* free electron-hole pairs
- *Transport* of the free electrons and holes upon an electric field results in a *current*

- A photodiode material
  - should be chosen with a bandgap energy slightly less than the photon energy corresponding to the operating wavelength of the system

p-n junction photodiode

- Reverse biased p-n photodiode
- Incident photon
  - will be absorbed in the depletion layer
    - The absorbed energy
      - generates Electron-Hole Pairs (EHP)

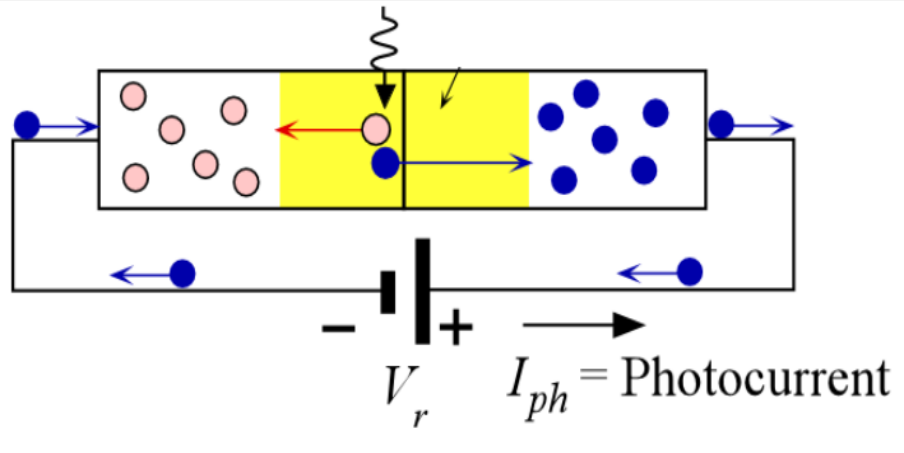

p-n junction photodiode

- The EHP generated
  - are separated by the reverse-bias voltage thereby leading to current flow in the external circuit as carriers drift across the depletion layer

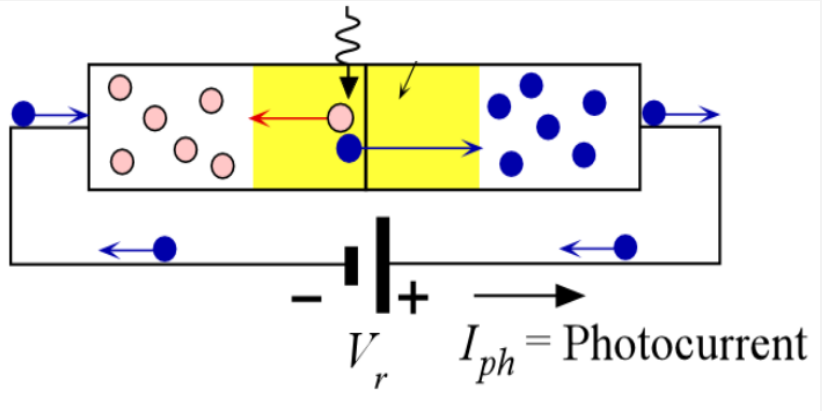

- Two-step process
  1. External photons split/generate electron-hole pairs in the depletion area
  2. These electrons and holes are made to move/flow

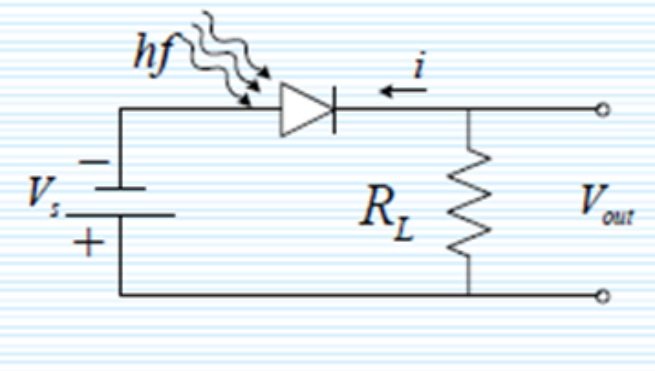

Photo detectors

- Thus
  - in semiconductor photodiodes free charge carriers (electron and holes) are generated by absorption of photons

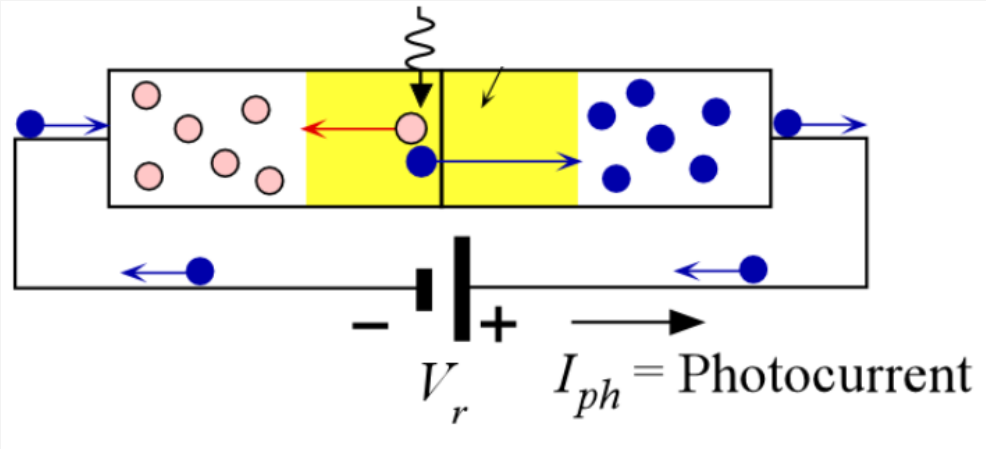

p-n junction photodiode

- Thus, the carriers
  - are swept from the depletion region by the reverse-bias external voltage

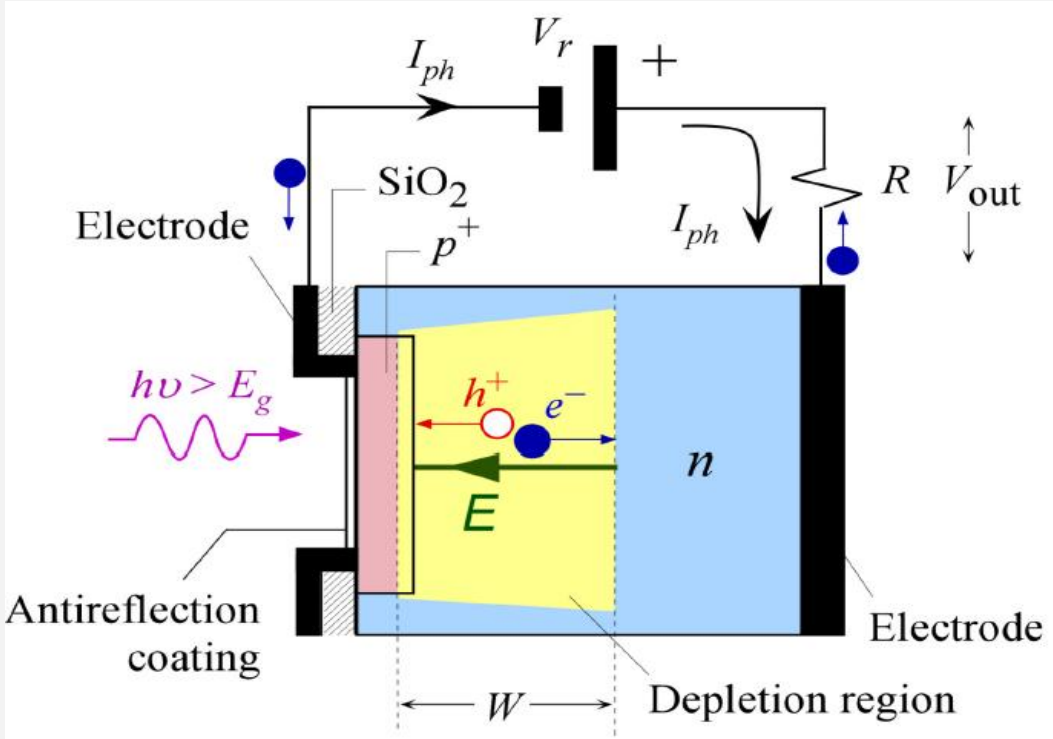

Semiconductor Photodiodes

- There are
  - three main types of semiconductor photodiodes
    1. pn junction photodiodes (Theoretical)
    2. PIN photodiodes (Practical)
    3. Avalanche photodiodes (Practical)

- Some important photodetector parameters
  1. Responsivity
  2. Quantum efficiency
  3. Spectral response range

pn-photodiode

- Evaluation of photodiode's response to
  - amplitude and frequency of the input signal
    - i. Input-output relationship
    - ii. bandwidth

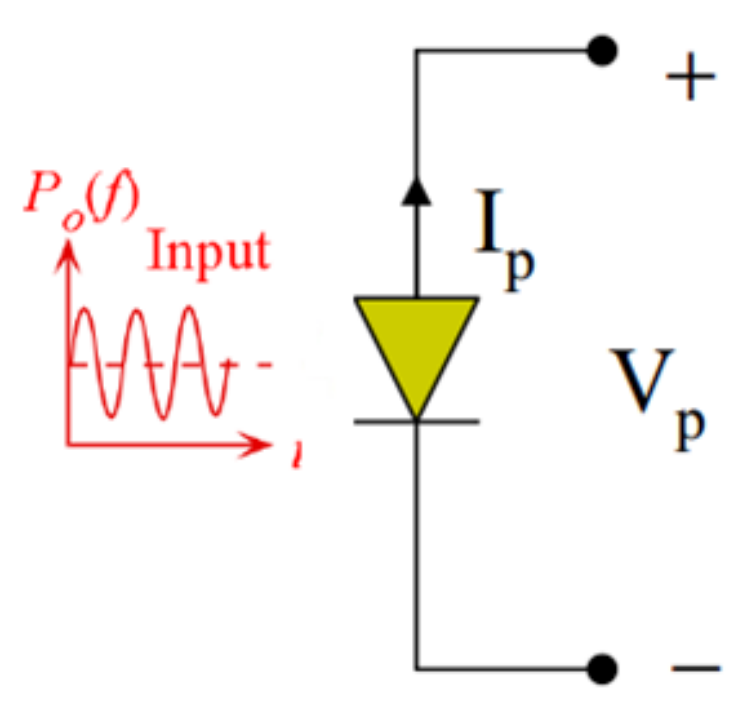

Input-output relationship

- The input is
  - optical power, p
- The output is
  - current called photocurrent, I_p

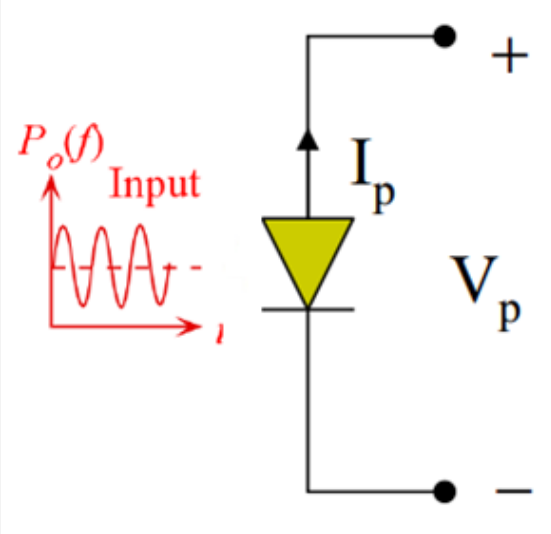

- From the principle of operations
  - What is the relationship between *p* and I_p ?

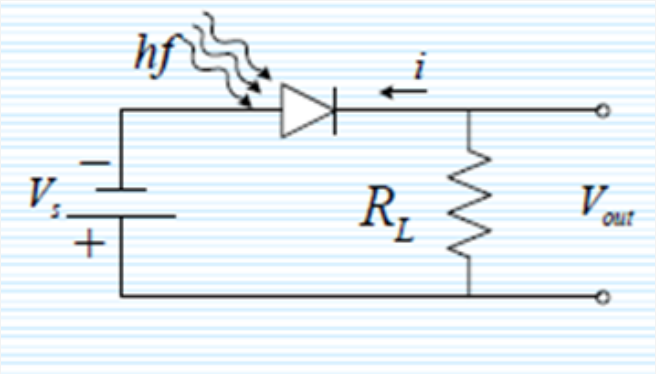

Input-output relationship

- From the principle of operations
  - the more photons that strike the active area
    - the more charge carriers are generated –→ more photocurrent

Input-output relationship

- Thus

$$I_p \propto p$$

$$I_p = \mathcal{R}\ \mathrm{p}$$

$$\mathcal{R} = \frac{I_p}{p} \quad \left(\frac{A}{W}\right) \text{ = responsivity}$$

Specifies the photocurrent generated per unit of optical power

Responsivity

- The performance
  - of the photodiode is characterized by the responsivity
    - Typical values = [0.4 – 1]
- The responsivity
  - shows how efficiently a photodiode converts light into an electrical signal
  - is the ratio of the output current of the detector to its optical input power

Input-output relationship

- Response
  - of the photodiode to the amplitude of the input signal

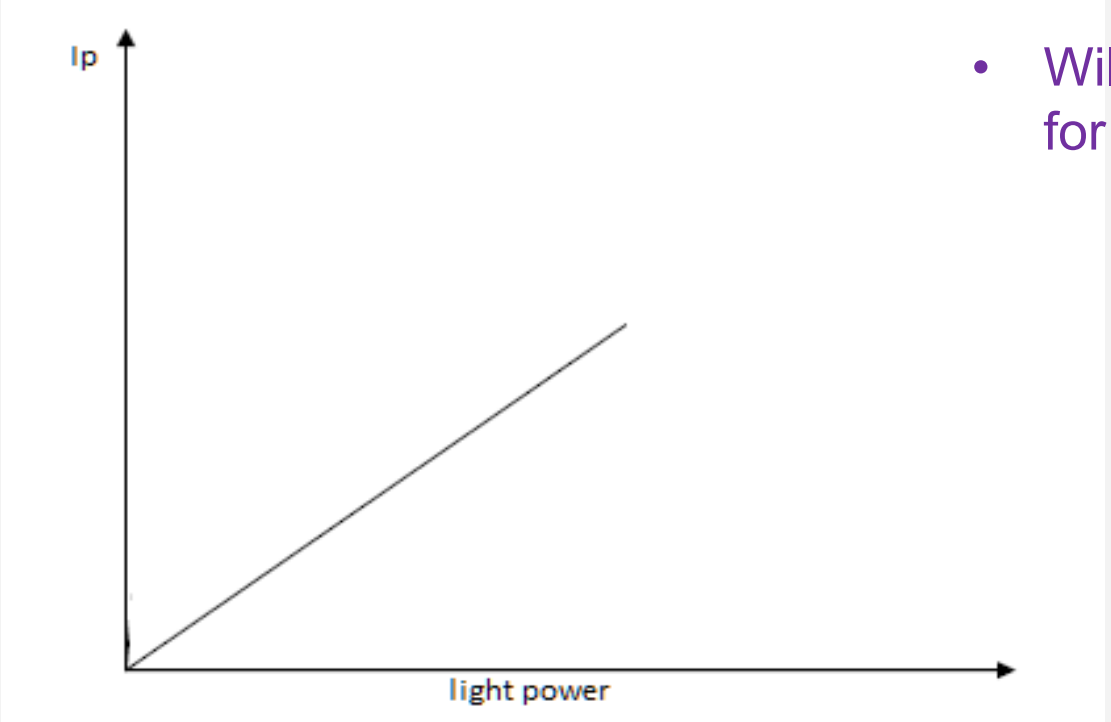

- Will this graph keep its linearity for all values of light power?

Problem

- The responsivity of a photodiode is 0.85 A/W and the input power saturation point is 1.5 mW. What is the photocurrent if the incident power is
  i. 1 mW
  ii. 2.5 mW

Responsivity versus wavelength

- Does the responsivity depend on the operating wavelength?

$$\mathcal{R} = \frac{I_p}{p} \left(\frac{A}{W}\right) = \text{responsivity}$$

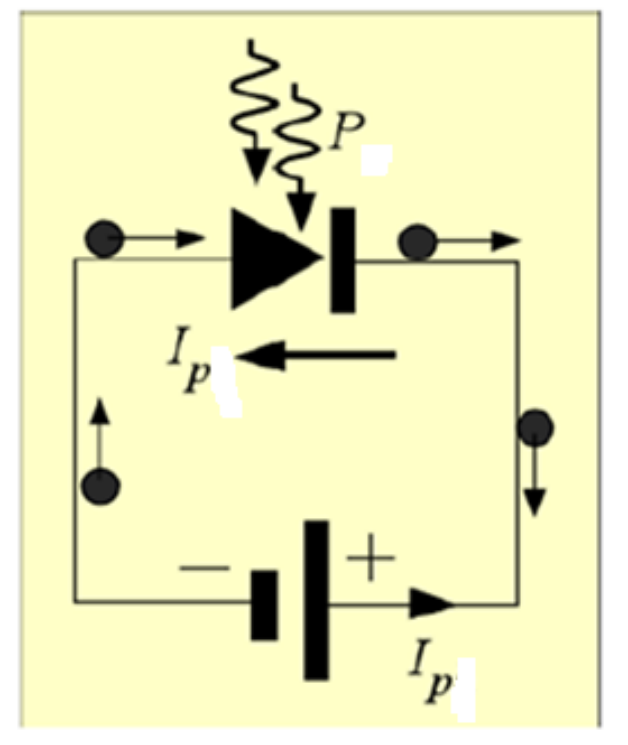

- Is the responsivity at
  - 1310 nm and 1550 nm the same?

Responsivity versus wavelength

- Does the responsivity depend on the operating wavelength?

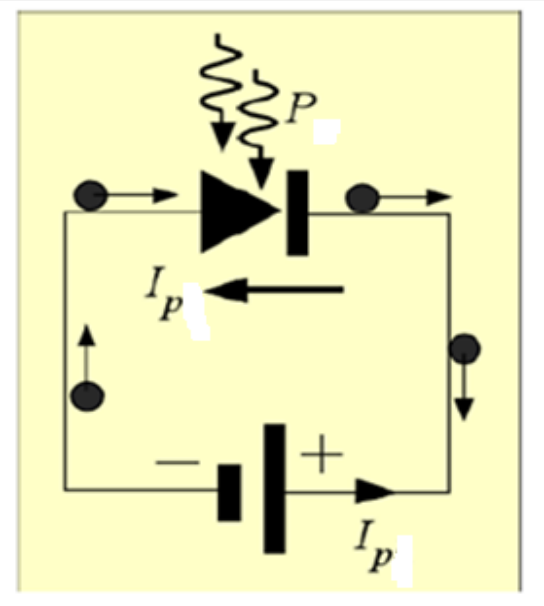

$$\mathcal{R} = \frac{I_p}{p}$$

$$p = N_p \frac{E_p}{t}$$

$$I_p = N_{elec} \frac{e}{t}$$

Np : Number of incident photons
Nelec : Number of collected electrons

Responsivity versus wavelength

- Does the responsivity depend on the operating wavelength?

$$\mathcal{R} = \frac{N_{elec} \,.\, e \,.\, \lambda \,.\, t}{t \,.\, N_p . \, h \,.c} = \frac{N_{elec}}{N_p} \,.\, \frac{\lambda}{h.\, {}^{c}/_{e}}$$

$$\mathcal{R} = \frac{\eta_{qe}}{1240.8} \,.\, \lambda(nm)$$ - comments

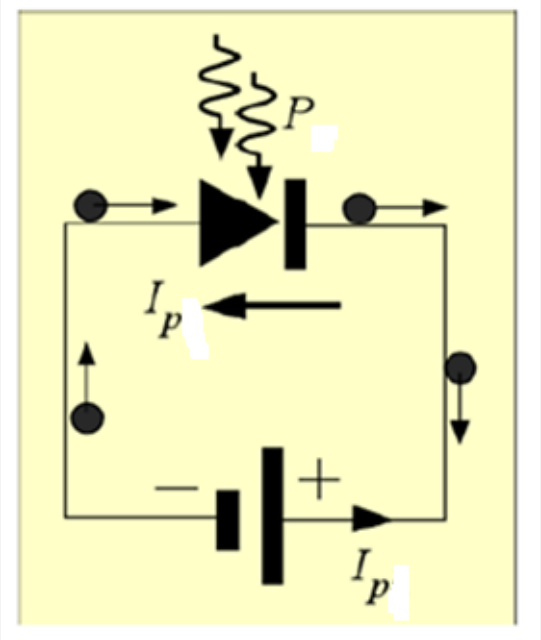

- The ratio N_{elec}/N_p is called the quantum efficiency of the photodiode

Quantum efficiency

- Not all photons are converted into photo-carriers

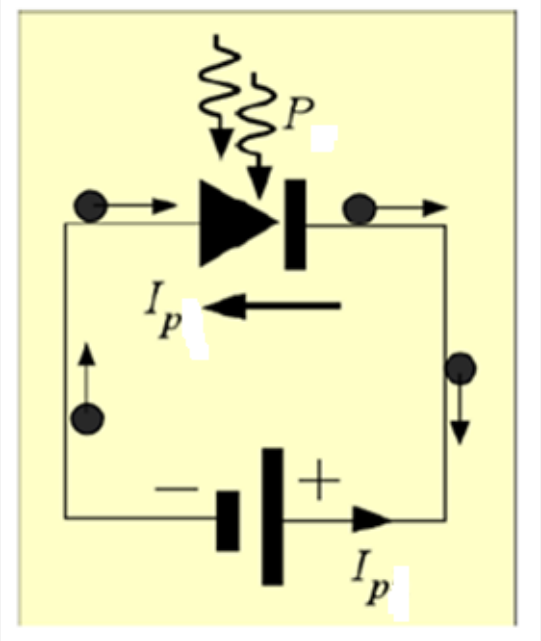

$$\frac{N_{elec}}{N_p}$$

$$\frac{\text{Number of free EHP generated and collected}}{\text{Number of incident photons}}$$

Quantum Efficiency

- The ratio
  - of the number of EHP generated by a photo detector to the incident photons in a given time is termed
    - The quantum efficiency

$$\eta_{qe} = \frac{number\ of\ generated\ electrons}{number\ of\ incident\ photons}$$

- The probability
  - that a single photon incident on the device generates a photocarrier pair that contributes to the photocurrent

Analysis of pn Photodiode

- If the depletion region has a width of W
  - and assuming the common exponential dependence of absorption
    - the total optical power absorbed in the active region is

$$P_{absorbed} = P_{in}[1 - e^{-\alpha W}]$$

  - where
    - P_{in} is the incident optical power
    - α = absorption coefficient

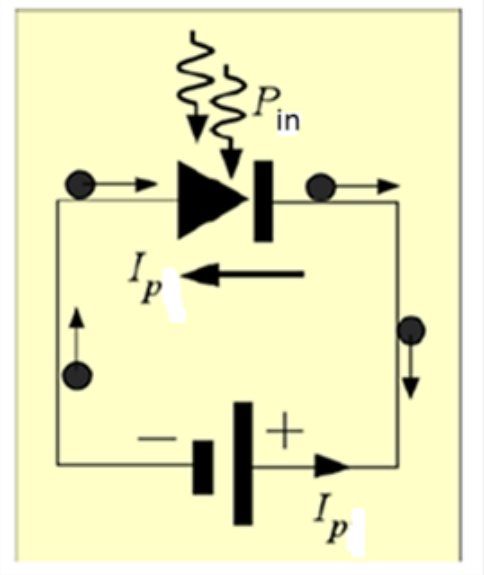

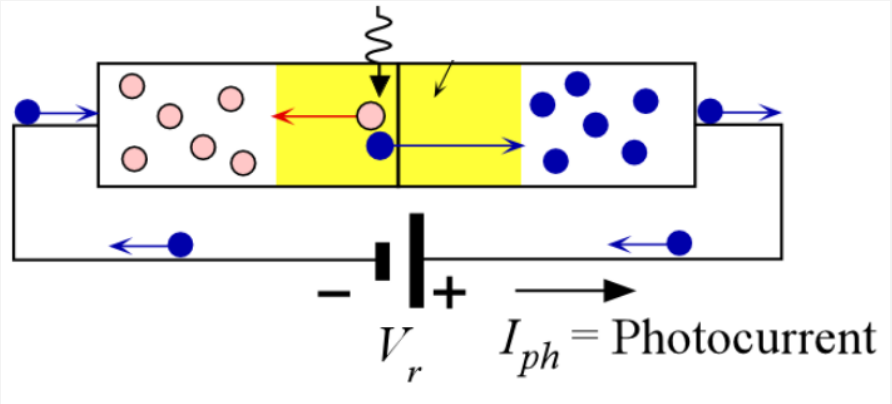

Analysis of pn Photodiode

- The quantum efficiency is

$$\eta_{qe} = \frac{P_{abs}}{P_{in}} = \left(1 - e^{-\alpha W}\right)$$

- Comment(s)

Analysis of pn Photodiode

$$\eta_{qe} = \frac{P_{abs}}{P_{in}} = \left(1 - e^{-\alpha W}\right)$$

- The wider
  - the depletion width, the more efficient the conversion process

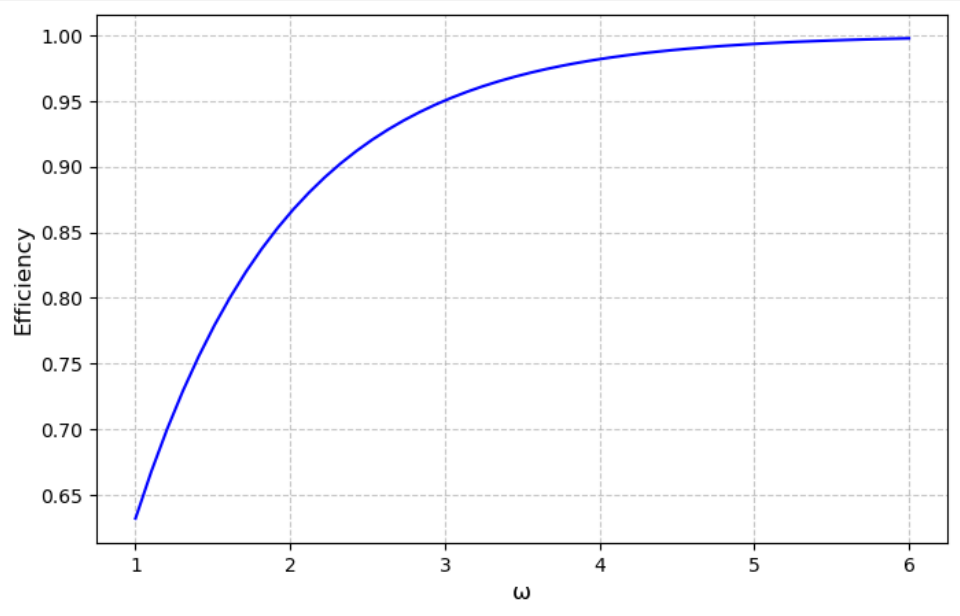

ω	η_qe
1	0.632120559
2	0.86466472
3	0.95021293
4	0.98168436
5	0.99326205
6	0.99752125

Analysis of pn Photodiode

- The primary photocurrent

$$I_p = \mathcal{R}\ \mathrm{p}$$

$$I_p = \frac{q.\lambda}{h.c} P_{in}(1 - e^{-\alpha W})$$

THANK YOU

Kwame Nkrumah University of Science and Technology, Kumasi | Leaders In Change

Visit us at www.knust.edu.gh

uro@knust.edu.gh | Follow KNUST on: